All rights reserved by Euro Cold S.r.l Modena (Italy). These drawings and specifications are the property of Euro Cold S.r.l. and shall not be reproduced, copied or used directly or undirectly for any purpose without the express written permission of EURO COLD S.r.l

TECHNICAL DATA ARE SUBJECT TO CHANGE WITHOUT PRIOR NOTICE AND OVERALL DIMENSION CAN CHANGE DUE TO THE REQUESTED ACCESSORIES.

FRAME W-SCW UL D3H

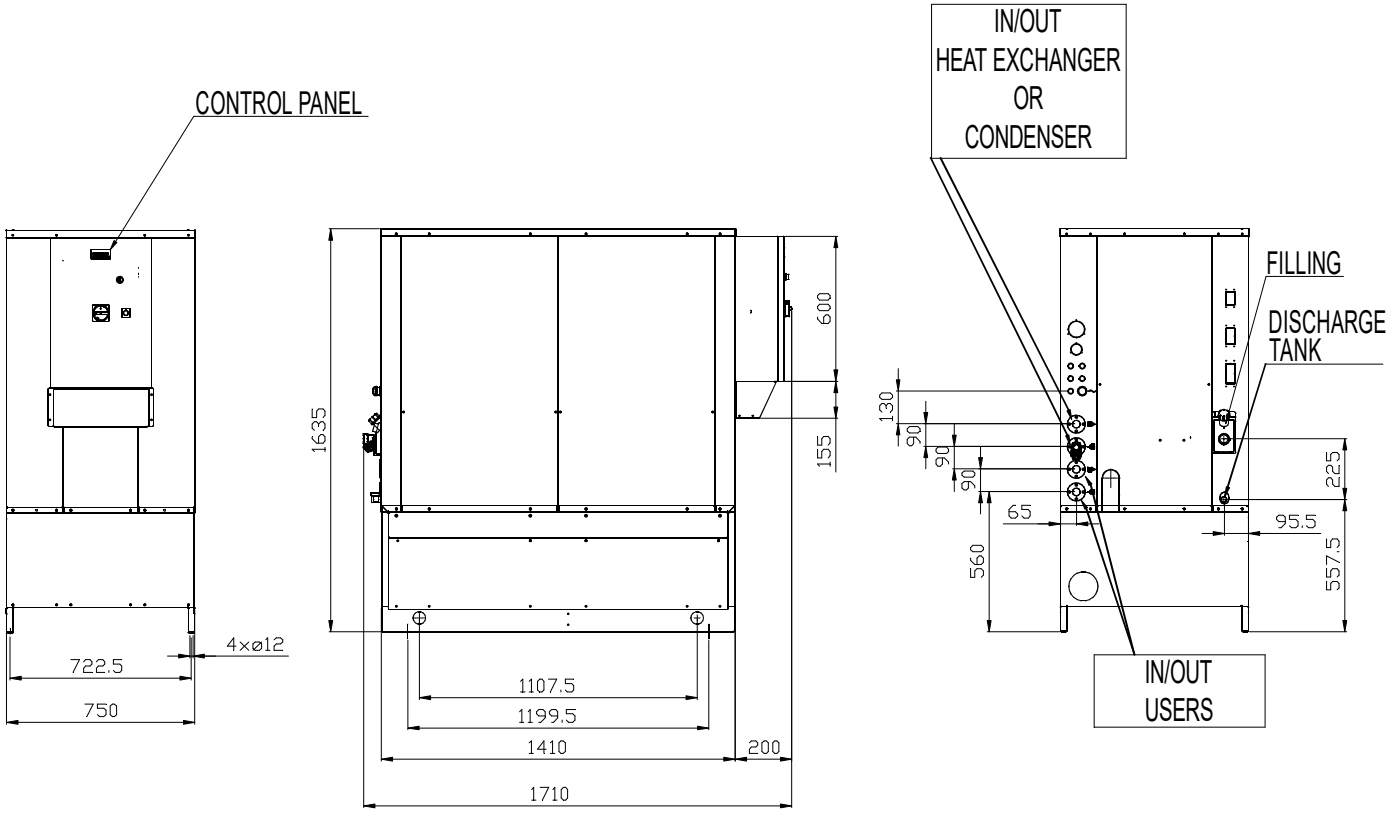

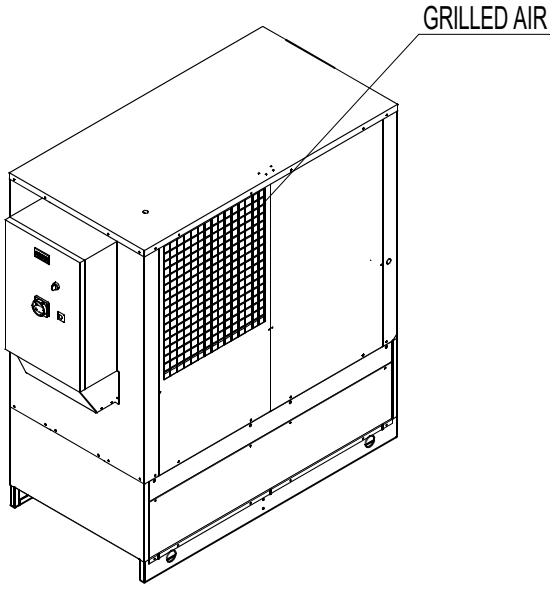

HYDRAULIC CONNECTION SIZES	
	W-SCW D3
IN	G.1"
OUT	G.1"

Material:	Thickness:	Z Y X W V U T S R Q P O N M L K J I H G F E D C B A			
		EDITION			
EURO COLD srl Tel. +39.059.817.8138 www.eurocold.it		Scale :		Designed:	
			Date:	09-01-2025	
			Sign:		
	Title:				Weight (g)
Model number:	Code:	Q.ty:	Drawing number: W-SCW-UL_D3H_REV00		